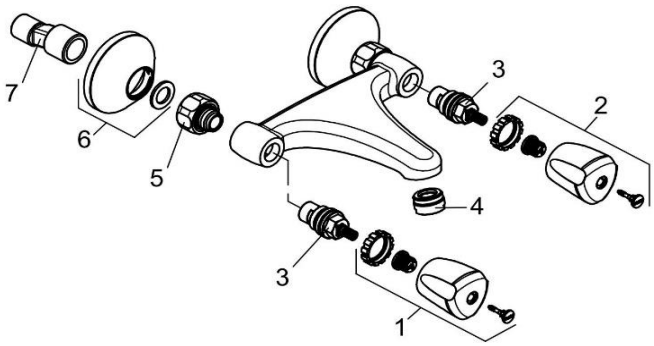

320040508		Wandarmatur DN 15	wall fitting DN 15
1	7542205-00	GRIFF	HANDLE
2	7542105-00	GRIFF	HANDLE
3	7521800-00	OBERTEIL	HEAD PART
4	7601805-00	STRAHLREGLER	AERATOR
5	7538005-00	WANDARMATURENANSCHLUSS	WALL CONNECTING NIPPLE
6	7517905-00	ROSETTE	ESCUTCHEON
7	7655100-00	S - ANSCHLUSS	S - CONNECTIONS